AN INSPECTOR'S GUIDE TO SEWERAGE LAW

(England and Wales Edition)

3rd Edition
November 2011
(Amended April 2013)

AN INSPECTOR'S GUIDE TO SEWERAGE LAW

(England and Wales Edition)

3rd Edition November 2011

Amended April 2013

Author: N Orman – WRc plc

Allen House, The Listons,

Liston Road, Marlow

Bucks. SL7 1FD

Tel: +44 (0)1628 891589

Fax: +44 (0)1628 472711

E-mail: *office@fwr.org.uk*

Home Page: *www.fwr.org*

CONTENTS

1. INTRODUCTION

This guide is intended to assist operations staff and other practitioners in England and Wales (Scottish law is different), to understand the complex subject of sewerage law and to help them in discussions with customers. It describes the law as it relates to the ownership and maintenance responsibility for drains and sewers following the transfer of private sewers and lateral drains on 1st October 2011, and the duties and powers of Sewerage Undertakers.

Sewerage law is complex and cannot be fully covered in this small pocket guide. Commonly understood definitions have therefore been used to help in discussions with customers and clients. Simple diagrams are also included to illustrate common arrangements for drains and sewers.

The first edition of this guide, published in 1992, was produced by the Sewerage Working Group of the Sewers and Water Mains Committee (now defunct) under the joint aegis of the (then) Water Services Association and the Foundation for Water Research. This third edition incorporates the relevant legislative changes that have come into effect in 2011. Grateful acknowledgement is expressed to those who provided comments on the first and second edition and who recommended the various changes that have now been incorporated.

Important Note: Further changes to the law have been made that have not at this time (November 2011) come into force and regulations to implement them have not been published. These provisions include:

- Mandatory adoption of all new sewers and lateral drains that connect to the sewer system (see Section 3.1.4)
- A new approvals and adoption process for Sustainable Drainage (SUDS) (see Sections 2.29, 3.2 and 5.12)

This guide may therefore be subject to amendment or revision when these come into force.

2. DEFINITIONS

The definitions used in the various Water and Public Health Acts are sometimes cumbersome and would not be readily understood by all staff and customers. Commonly understood meanings have been used in the following definitions which are not intended to be legal definitions.

2.1 Drain

Normally a pipeline that conveys foul sewage and/or surface water runoff from a single property and which is inside the boundary of the property. It is usually of small internal diameter.

Note: for an explanation of 'the property' see Section 5.

2.2 Lateral Drain

Normally a pipeline that conveys foul sewage and/or surface water runoff from a single property and which is outside the boundary of the property it serves. It is usually of small internal diameter.

2.3 Sewer

Normally a pipeline which conveys foul sewage and/or surface water runoff from more than one property.

2.4 Public Sewer

A sewer which has either been adopted as a public sewer, is connected to the public sewer system, or was in use prior to 1937 (1965 in inner London). There are, however, a small number of exceptions.

2.5 Private sewer

A sewer which is not a public sewer.

2.6 Public lateral drain

A lateral drain connecting with the public sewer system.

2.7 Highway Drain

A pipeline owned by the highway authority, which conveys surface water from the highway (e.g. from roads and footpaths).

2.8 Foul sewage

Flows comprising domestic or industrial wastewater.

2.9 Surface water

Naturally occurring water and rain water runoff from roofs and paved areas.

2.10 Foul sewer

A sewer which is intended to convey only foul sewage.

2.11 Surface water sewer

A sewer which is intended to convey only surface water.

2.12 Combined sewer

A sewer which conveys both foul sewage and surface water.

2.13 Section 102 Sewer

A private sewer which the Sewerage Undertaker has given notice of their intention to adopt as a public sewer under Section 102 of the Water Industry Act 1991. Such sewers remain private sewers until formally adopted. They must have been constructed after 1937.

2.14 Section 104 sewer

A private sewer constructed by a builder, developer, or local authority at their expense under a formal Section 104 (Water Industry Act 1991) agreement with the Sewerage Undertaker.

Currently such sewers normally become public sewers at the end of a maintenance period, usually not less than one year after construction, provided that they were properly constructed, and have been properly maintained. However, new legislation, which has yet to come into force (Section 106B of the Water Industry Act 1991 inserted by Section 42 of the Flood and Water Management Act 2010) will ensure that adoption always occurs and in a much shorter timescale.

(Water Industry Act 1991 Section 104)

2.15 Transferred sewers and lateral drains (Section 105A sewers and lateral drains)

A sewer which became a public sewer by virtue of a scheme made by the government under Section 105A of the Water Industry Act 1991. Private sewers that were connected to the public sewer system on 1st July 2011 were normally transferred on 1st October 2011. Sewers and lateral drains connecting to the public sewer after this date will either be subject to a supplementary transfer or will be required to be adopted on construction (see Section 3.1.4).

2.16 Watercourse

A naturally occurring flow of water in a defined channel.

2.17 Stream

A small watercourse.

2.18 Culvert (or culverted watercourse)

A watercourse or a stream which has been piped or covered over. A culverted watercourse is not a public sewer.

2.19 Sewage pumping installation

An installation which pumps sewage under pressure from one point to another through a rising main (see 2.20). Sewage pumping installations on Transferred sewers and lateral drains (see 2.15) that transferred on 1st October 2011 will be transferred by 1st October 2016 (see 5.4).

2.20 Rising main

A drain or sewer through which foul sewage and/or surface water runoff is pumped (from a pumping installation) under pressure. Sewage rising mains which are parts of Transferred sewers and lateral drains (see 2.15) which transferred on 1st October 2011, will be transferred by 1st October 2016 (See 5.4)

2.21 Inspection chamber

A small covered chamber providing access to a drain or sewer or equipment. They are usually on small diameter pipes and are often situated within the boundary of the property. Inspection chambers are normally located either where a drain changes direction or where two or more pipelines meet. They can be situated on drains, lateral drains or on private or public sewers.

2.22 Manhole

A covered chamber, larger than an inspection chamber, providing access to a sewer for both equipment and personnel. Manholes can be situated within the boundary of a property but are more frequently situated in a highway or public open space. They can be located on private sewers, public sewers or highway drains.

2.23 Road gully

A small chamber normally covered by a metal grate, usually situated at the edge of a highway, which is used to drain surface water from the highway. The surface water is then passed to a highway drain, public sewer, watercourse or soakaway. Gullies are part of the highway drainage system.

2.24 Rodding eye

An access point usually provided at the upstream end of a drain or sewer formed by bringing the end of the pipeline to the surface of the ground. The opening is usually no larger than the diameter of the pipe, and is normally blanked off with a small access cover.

2.25 Soakaway

An underground pit usually filled with rubble or a plastic lattice structure, or a length of porous pipeline normally surrounded by rubble. It takes surface water from sewers or drains, and allows it to soak into the surrounding ground. It is usually situated within the boundary of a property.

2.26 Septic tank

A tank into which foul sewage from one or more than one property drains. The sewage is treated by the presence of bacteria in the tank. Septic tanks have an outlet to an effluent drain or drainage field (see 2.27). They are often located within the boundary of the property.

2.27 Drainage field

A length of pipeline, normally surrounded by gravel, which takes effluent from a septic tank or package

treatment works. Biological treatment occurs naturally in the ground above the groundwater level provided the ground does not become saturated and there is a sufficient depth of ground between the pipe and the groundwater level.

2.28 Cesspool (or cesspit)

A tank into which foul sewage drains, usually from a single property. The tank is used only to store the sewage until it is collected and should be watertight. Cesspools are normally located within the boundary of the property.

2.29 Sewerage Undertaker

The Water Company appointed under the Water Industry Act 1991 to be responsible for sewerage.

2.30 Sustainable drainage systems (SUDS)

A surface water drainage system that is designed to minimise flood risk both within and outside the area served by the system, protect the quality of the receiving waters and contribute positively to the local environment.

A sustainable drainage system can include pipes, open shallow ditches (sometimes called swales), ponds, tanks and soakaways.

3. DUTIES

3.1 Sewerage Undertakers

3.1.1 General duty

Sewerage Undertakers have a general duty to provide public sewers and to clean and maintain them, so as effectually to drain their areas. They also have a general duty to provide and extend sewerage systems to ensure that an area is, and continues to be, effectually drained.

(Water Industry Act 1991 Section 94)

3.1.2 Customer service standards

The Sewerage Undertaker has a duty to comply with regulations which lay down certain customer service standards for sewerage relating to:

- replies to written complaints;
- account queries;
- keeping appointments;
- internal and external sewer flooding.

(Water Industry Act 1991 Section 95)

3.1.3 Sewer maps

Sewerage Undertakers have a duty to keep sewer records which show the location, type of pipe and status of public sewers and lateral drains, together with Section 102 and 104 sewers or lateral drains that are proposed for adoption as public sewers or lateral drains.

Customers may inspect sewer records at an office of the Sewerage Undertaker or the District Council. Except for the two cases listed below, the sewer records must show all public sewers. The Sewerage Undertaker does not have a duty to keep records of public sewers constructed before 1st September 1989:

- if they were not known to exist or;
- if it is not reasonably practicable to locate the sewers.

Former private sewers and lateral drains that became public sewers or lateral drains on 1st October 2011 (see section 5) are sometimes shown on sewer maps, but it is unlikely that they will all be shown on sewer maps for many years. Watercourses are sometimes shown on sewer maps.

(Water Industry Act 1991 Section 199)

3.1.4 Connection to a public sewer

If a customer wishes to connect a property to a public sewer then the Sewerage Undertaker has a duty to allow this connection provided it is only to discharge domestic foul sewage or surface water. If the public sewer lies in the highway the customer has the power, subject to certain approvals, to dig up the highway in order to connect the drain to the public sewer. The customer cannot, however, connect a foul drain into a surface water sewer nor, without the permission of the Sewerage Undertaker, a combined or surface water drain into a foul sewer.

However, there are two pieces of new legislation, which have yet to come into force that will restrict this right:

- The first (Section 106B of the Water Industry Act 1991 as inserted by Section 42 of the Flood and Water Management Act 2010) will make it a condition that the applicant will first enter into a Section 104 agreement (see 4.1.2) that will ensure that any sewers or lateral drains created by the connection will be adopted.
- The second (Flood and Water Management Act 2010 Section 32 & Schedule 3) (see 3.2) will restrict the right to connect surface water from developments that have drainage implications (to be defined in regulations).

Note: Section 106B of the Water Industry Act 1991 came into force on 1st October 2012 in the area of Sewerage Undertakers wholly or mainly in Wales (i.e. the operating area of Dŵr Cymru Welsh Water which includes some part of Herefordshire and Cheshire, but excludes parts of Powys). There is as yet no firm date for this to come into force in the area of Companies wholly or mainly in England..

(Water Industry Act 1991 Sections 106, 106A, 106B and 108)

The customer would normally have to pay the cost of making or supervising the connection and if the property is connected to a public sewer for the first time, an infrastructure charge (see paragraphs 4.1.3 and 4.1.4).

(Water Industry Act 1991 Section 146)

Planning conditions may also restrict the right of connection in certain circumstances. Subsoil or land drainage from fields or gardens may not be connected to a public sewer without the permission of the Sewerage Undertaker.

3.1.5 Removal of a public sewer from private land

If a landowner wishes to improve or develop his land, he can require a Sewerage Undertaker to alter or remove

a public sewer or lateral drain from (or adjacent to) the land. The Sewerage Undertaker has a duty to comply with this requirement unless it is unreasonable. The landowner has to pay the Sewerage Undertaker's costs of removal and relocation. If the Sewerage Undertaker refuses to comply the landowner may appeal to the Water Services Regulatory Authority (Ofwat).

(Water Industry Act 1991 Section 185)

3.2 Sustainable Drainage Approval Bodies

The Flood and Water Management Act 2010 contains legislation, which has yet to come into force, that designates County and Unitary Councils as SUDS Approval Bodies (SAB).

When this legislation comes into force certain developments will need to have their surface water drainage arrangements approved by the SAB before construction. When the drainage is constructed, the SAB will also be required to take over responsibility for the future maintenance of any drainage that they have approved.

4. POWERS

4.1 Powers of Sewerage Undertakers

4.1.1 Powers of entry

The Sewerage Undertaker has powers to enter private land or premises to:

- construct public sewers or lateral drains either above or below ground;
- inspect, maintain, adjust or repair existing public sewers or lateral drains;
- carry out works incidental to the above.

These powers cannot, however, be applied to Crown lands or to operational land belonging to certain other statutory undertakings such as railway or canal companies without permission of that undertaking.

Sewerage Undertakers have a duty to do as little damage as possible and to compensate customers for loss or damage (and for depreciation in the value of the customer's land) if a public sewer is laid through their land. This compensation for loss or damage can be reduced if the value of the land is enhanced by laying the sewer. Sewerage Undertakers have a duty to comply with a code of practice, under Section 182, of the Water Industry Act 1991, showing how they propose to carry out work on private land. They must

make copies of the code available to each person served with a notice of works.

Reasonable notice must be given to the owners and occupiers of the land before works commence.

When laying new sewers where none exist, 3 months notice is required unless the water company is required to provide the pipe by a requisition (Water Industry Act 1991 Section 98) when at least 3 weeks notice is required.

When making alterations to existing sewers, 6 weeks notice is required.

No period of notice is specified for entering land to carry out work in an emergency, but the notice must be reasonable in the circumstances.

(Water Industry Act 1991 Section 159)

4.1.2 Powers to enter into an agreement to adopt sewers

A Sewerage Undertaker has the power to enter into an agreement with any person or company constructing sewers, to adopt the sewers after completion of construction, provided they are built in accordance with the terms of the agreement.

If the person constructing the sewers (the applicant) and the Sewerage Undertaker cannot agree on the terms of the agreement or the Undertaker refuses the application

or does not state, within 2 months of the application being made, the terms of the agreement it will accept, then the applicant may appeal to the Water Services Regulatory Authority (Ofwat).

The Water Services Regulatory Authority (Ofwat) may, on behalf of the Sewerage Undertaker:

- modify the terms offered; or
- refuse the application; or
- enter into an agreement with the applicant.

(Water Industry Act 1991 Sections 104 and 105) as amended.

4.1.3 Right to make connections to sewers

The Sewerage Undertaker has the right to elect to carry out or supervise the connection of private sewers or drains to public sewers. The person requiring the connection must pay the reasonable cost of carrying out the work or of supervision. The estimated cost must be paid to the Undertaker before the work is commenced or a suitable security provided to cover the cost of the work. If the estimated cost of the work differs from the actual cost, then a further payment or a refund will be payable as appropriate. This right relates only to making the connection and not to the construction of the private sewer or drain itself.

(Water Industry Act 1991 Section 107)

4.1.4 Infrastructure charge

Where premises are being connected (either directly or indirectly) to a public sewer for the first time, the Sewerage Undertaker may make an infrastructure charge for the connection.

(Water Industry Act 1991 Section 146)

4.1.5 Power to adopt existing sewers

The Sewerage Undertaker may at any time by declaration adopt any sewer in its area which was constructed after 1st October 1937. The Undertaker must give 2 months notice of its intention to adopt to the owners of the sewers.

An owner of such a sewer may request the Sewerage Undertaker to make a declaration of its intention to adopt.

In deciding whether to adopt a sewer, the Sewerage Undertaker shall conform to certain criteria set out in Section 102.

An aggrieved owner may appeal to the Water Services Regulatory Authority (Ofwat) against the Sewerage Undertaker's proposal to make a declaration, or, as the case may be, its refusal to make a declaration. The Water Services Regulatory Authority (Ofwat) may uphold or reverse the decision of the Undertaker and may specify conditions including that the Sewerage Undertaker shall

pay compensation to the owner.

(Water Industry Act 1991 Sections 102 and 105) as amended.

4.1.6 Power to require a proposed drain or sewer to be constructed to form part of the general system

If a person proposes to construct a sewer or drain, the Sewerage Undertaker may require that the proposals are altered in size, depth and direction, etc. so that it will form part of the general drainage system of the area.

The Sewerage Undertaker must pay for any increased costs that are reasonably incurred in the construction of the sewer and any increased maintenance costs incurred before the sewer or drain becomes a public sewer.

If the person making the proposal is aggrieved by the Sewerage Undertaker's requirements, that person may, within 28 days, appeal to the Water Services Regulatory Authority (Ofwat) who may disallow the requirements or allow them with or without modification.

(Water Industry Act 1991 Section 112) as amended.

4.1.7 Powers of Sewerage Undertakers with respect to private drains

Where a Sewerage Undertaker has reasonable grounds for believing that a private drain, which connects to a

public sewer, is so defective as to cause a nuisance or a health hazard, or is allowing groundwater to enter the sewer, it may examine and test the private drain at its own expense. Sewerage Undertakers have no powers to require an owner to repair the drain.

(Water Industry Act 1991 Section 114)

4.2 Powers of Local Authorities

4.2.1 Powers of a District Council to inspect private drains and sewers

District Councils have powers to inspect private drains and sewers and septic tanks and cesspools where they believe they may be causing a nuisance or are a health hazard or where they are allowing groundwater into a private septic tank or cesspool. If found defective, the District Council may require the owner to carry out repairs (See Section 4.2.2)

(Public Health Act 1936 Section 48) as amended

4.2.2 Powers of a District Council to require repairs to private drains and sewers

If it appears to a District Council that a private drain or a private sewer is a health hazard or a nuisance it may, by giving notice to the owner or the occupier of the building, require them to carry out repairs.

(Building Act 1984 Section 59, as amended,
and Section 99)

If it appears to a District Council that a drain or private sewer is blocked, it may, by giving notice, require the owner or occupier of any premises connected to the drain or sewer, or the owner of the private sewer, to remove the blockage within 48 hours.

(Public Health Act 1962 Section 17, as amended**, or Local Government Miscellaneous Provisions Act 1976 Section 35)**

4.2.3 Powers of a District Council to require repairs to septic tanks and cesspools

If it appears to a District Council that a private cesspool or septic tank is a health hazard or a nuisance it may, by giving notice to the owner or the occupier of the building, require them to carry out repairs.

(Building Act 1984 Section 59 as amended
and Section 99)

If a private cesspool or septic tank is leaking or overflowing a District Council may, by giving notice, require the person responsible for the leak or overflow to take action to prevent the leak or overflow.

(Public Health Act 1936 Section 50)

4.2.4 Powers of a Unitary or County Council to require repairs to Sustainable Drainage Systems

If a Unitary or County Council considers that a sustainable drainage system is a health hazard or a nuisance it will, after this provision comes into force, be able, by giving notice to the owner or the occupier of the building served by the drainage system, require them to carry out repairs.

(Building Act 1984 Section 59, as amended and prospectively amended, **by Flood and Water Management Act 2010 Schedule 3)**

4.2.5 Powers of Local Authorities to carry out works in default

Where a person served with a notice under any of the provisions listed in paragraphs 4.2.2 to 4.2.4 does not comply with the requirements of the notice within the time specified, the Local Authority will be able carry out the works and recharge their costs.

(Building Act 1984 Section 99. Public Health Act 1962 Section 17), as amended by **Local Government (Miscellaneous Provision) Act 1982 Section 27 or Local Government (Miscellaneous Provisions Act 1976 Section 35 or Public Health Act 1936 Section 275)**

5. OWNERSHIP AND MAINTENANCE

The first principle to be applied is that whoever owns a drain or sewer is normally responsible for its maintenance. Tenants are not normally responsible for the maintenance of drains and private sewers (although this responsibility could be passed to the tenant in a tenancy agreement).

Maintenance includes dealing with blockages and repairs, or replacing the drain or sewer if required.

Broad definitions of ownership and maintenance responsibilities are given below. Typical arrangements are indicated in the diagrams following the definitions. It must be emphasised that particular cases may vary due to conditions in property deeds or other local factors.

The term 'property' is used in this guide to describe a building or group of buildings in a single curtilage. The term curtilage is difficult to define precisely, however, it is normally considered that a house (whether detached, semi-detached or terraced) in its own garden is a single property. A block of flats, and its grounds however, is normally considered to be a single curtilage and should therefore be regarded as one property for this purpose. One useful indication that a building or group of buildings should be regarded as a single curtilage is if the land in which the building or buildings are situated is for the private use in common by all the occupants of the building or buildings.

Gravity sewers and lateral drains which were either directly or indirectly connected to a public sewer in the area of a Sewerage Undertakers wholly or mainly in Wales (i.e. the area of Dŵr Cymru Welsh Water which includes some parts of Herefordshire and Cheshire, but excludes parts of Powys) on 1st October 2012 became public sewers or lateral drains on 1st April 2013.

(Water Industry Act 1991 Section 105A).

Note: Typical ownership is illustrated in the drawings in section 6.

5.1 Drains

Drains (and associated inspection chambers) serve a single property and are owned and maintained by the owner of the property. Owners are responsible for carrying out repairs to their drains which will be at their expense unless they can prove damage by others. Where drains communicate with the public sewer system they are normally the owner's responsibility up to the boundary of the property. Where they do not connect to the public sewer system, drains are normally the owner's responsibility up to their connection with a private sewer, a watercourse, a culvert or a public treatment facility.

5.2 Lateral Drains

Lateral drains connected to the public sewer systems are normally owned and maintained by the Sewerage Undertaker.

5.3 Sewers

A sewer is normally a public sewer if it has been adopted as a public sewer, built by the Sewerage Undertaker, is connected to the public sewer system, or was in use prior to 1937 (1965 in inner London). In other cases, it is a private sewer.

5.3.1 Public sewers

Public sewers are owned and maintained by the Sewerage Undertaker.

5.3.2 Private sewers

Private sewers will normally now only occur on systems with private treatment works or on surface water systems discharging directly to a watercourse.

Occasionally the deeds to a property will indicate the ownership of a private sewer and the responsibility for maintenance. If ownership and maintenance responsibilities are not indicated in the deeds, then the following convention normally applies.

If a problem occurs at a point along a private sewer, those properties which drain to that point are jointly and equally responsible for the cost of dealing with the problem. The cost of clearing a blockage which has caused flooding at an inspection chamber or manhole would therefore be paid for equally by all property owners upstream of the blockage.

Private sewers often pass through private gardens and land, but may also be laid in the highway.

Private sewers do not have to be shown on sewer maps kept by the Sewerage Undertaker but often are (see paragraph 3.1.3).

Private sewers which serve council or housing association houses are normally owned and maintained by the District Council's housing department or a housing association. However, if council houses have been sold, there may have been a condition in the sale of the property which makes the owner partly responsible for maintaining the private sewer. (Normally the owner would be fully responsible for maintaining the drains.)

5.4 Sewage pumping installations and rising mains

All sewage pumping installations and rising mains that are part of a public sewer or lateral drain will in future be maintained by the Sewerage Undertaker. However, those

that are on transferred sewers were not immediately transferred and will be subject to a phased transfer. They will all be transferred by 1st October 2016.

5.5 Highway drains

Highway drains and road gullies are normally owned and maintained by the highway authority. Sometimes the District Council undertakes the maintenance on behalf of the highway authority. If the street is unadopted then maintenance of the highway drainage is normally the responsibility of the property owners on either side of the street.

5.6 Soakaways and drainage fields

Soakaways usually serve one property in which case they are owned and maintained by the owners of that property. The maintenance of soakaways and drainage fields serving more than one property would normally be shared equally between the owners of the properties which drain to the soakaway and drainage field.

5.7 Septic tanks and cesspools

Septic tanks or cesspools usually serve one property and are owned and maintained by the owner of the property. If the septic tank or cesspool serves more than one property then it will usually be jointly maintained by the

owners of the properties which it serves and they will be equally responsible for its maintenance. Some septic tanks serving more than one property built prior to 1937 are owned and maintained by the Sewerage Undertaker. Where they serve council properties, however, they are usually owned and maintained by the District Council's housing department.

Some Sewerage Undertakers and District Councils provide emptying and disposal services for septic tanks or cesspools for which they normally charge.

5.8 Watercourses, streams, culverts and that are not main rivers

The owner of the land through which an ordinary watercourse (i.e. one that is not a main river (see 5.9)) passes is normally responsible for its maintenance. Where a watercourse, stream or culvert forms the boundary of a property, the owner of the property is usually responsible for maintaining the bank of the watercourse or stream up to the centre line of the watercourse or stream and in the case of a culvert, is jointly responsible for maintenance with other owners.

5.9 Main rivers

Main rivers are watercourses, streams, or culverts which have been classified as "main rivers" by the

Environment Agency. The Environment Agency may carry out works of maintenance or improvement to banks and beds of main rivers or they may require the owners of the adjoining land (riparian owners) to carry out maintenance.

5.10 Section 102 sewers and lateral drains

Until a Section 102 sewer has been formally adopted by a Sewerage Undertaker, the sewer remains a private sewer which is owned and maintained either:

- by the person who constructed it; or
- jointly by the owners or occupiers of the properties served by it.

5.11 Section 104 sewers and lateral drains

Until a Section 104 sewer has been formally adopted by a Sewerage Undertaker, the sewer is a private sewer normally owned jointly by the properties served by it. In practice, however, the sewers are usually maintained by the developer.

5.12 Sustainable Drainage Systems (SUDS)

SUDS subject to drainage approval under the Flood and Water Management Act 2010 will be the responsibility of the SAB (which will be the County or Unitary Council).

In some other cases SUDS were taken over by the District Council under an agreement with the developer.

In most other cases the system will be private and will either be the responsibility of a management company set up by the developer, or it will be the responsibility of the owners of the properties drained by the system.

In a very few cases the Sewerage Undertaker may be responsible for some SUDS features such as ponds.

6. DRAWINGS

The drawings on the following pages are intended to illustrate the typical ownership and maintenance responsibilities for sewers for a number of common types of development. Different arrangements of sewers are also shown.

In each drawing the public sewer is shown in the highway, as this is the most common position. The legal position, however, would be no different if the public sewer were in private land or public open space.

Key

	Private drain	Rising Main (Private Drain)
	Lateral drain	Rising Main (Lateral drain)
	Sewer	Rising Main (Sewer)
	Inspection chamber	
	Rainwater pipe	
	Soil pipe or sink waste pipe	
	Manhole	
	Gully	
	Soakaway	
	Septic tank	
	Pumping station	
	Public sewer before transfer	
	Now public - Lateral drains were normally private. Sewers were normally public if built and drained this way before 1937 otherwise they were normally private.	
	Normally public if built and drained in this way before 1937. Normally private if built since 1937	
	Highway drainage (maintained by the Highway Authority)	
	Private	

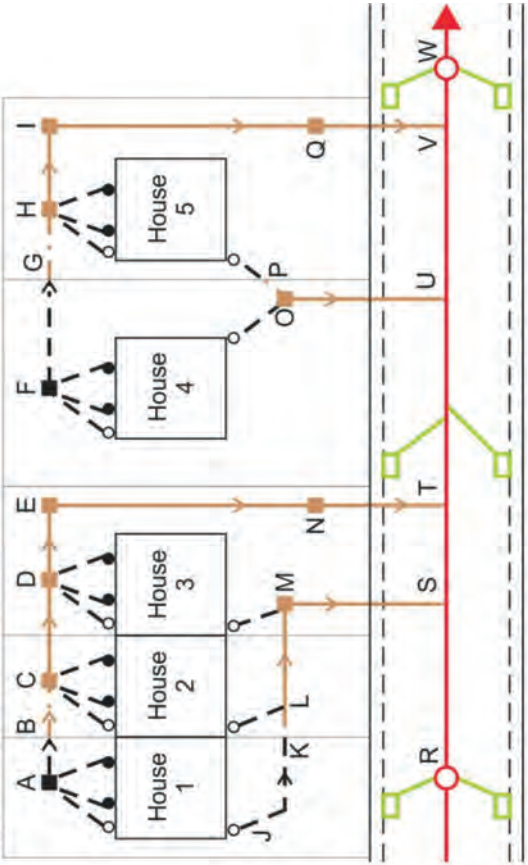

Figure 1 Combined Sewers

Table1

Pipeline	**Normal Maintenance Responsibility**
Drain A to B	House 1
Lateral Drain B to C	Sewerage Undertaker
Sewer C D E N to T	Sewerage Undertaker
Drain J to K	House 1
Lateral Drain K to L	Sewerage Undertaker
Sewer L M S	Sewerage Undertaker
Drain F to G	House 4
Lateral Drain G to H	Sewerage Undertaker
Sewer H I Q V	Sewerage Undertaker
Lateral Drain P to O	Sewerage Undertaker
Sewer O to U	Sewerage Undertaker
Sewer R S T U V W	Sewerage Undertaker

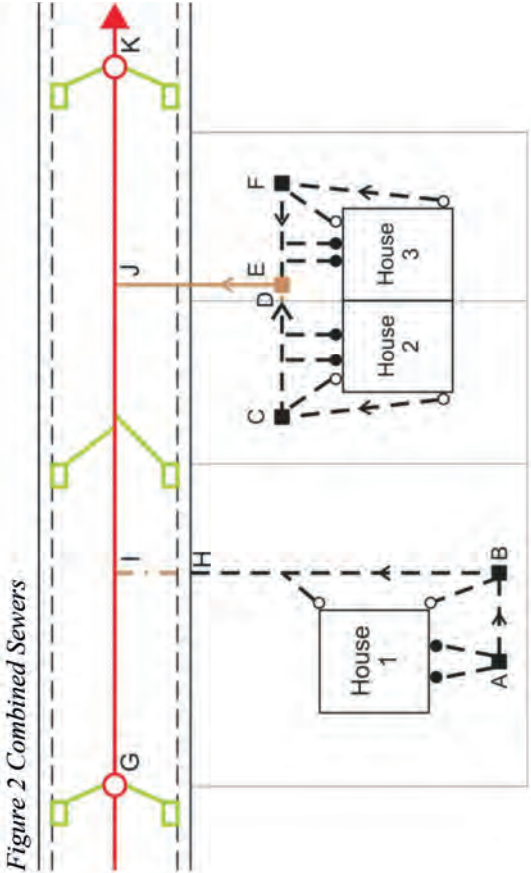

Figure 2 Combined Sewers

Table 2 Combined Sewers

Pipeline	**Normal Maintenance Responsibility**
Drain A B H	House 1
Lateral Drain H to I	Sewerage Undertaker
Drain C to D	House 2
Lateral Drain D to E	Sewerage Undertaker
Drain F to E	House 3
Sewer E to J	Sewerage Undertaker
Sewer G I J K	Sewerage Undertaker

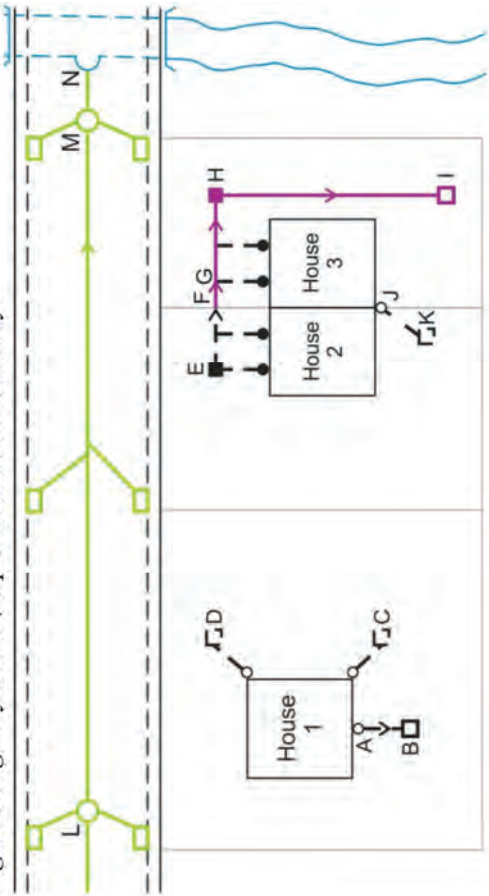

Figure 3 Highway Drains, Septic Tanks and Soakaways

Table 3 Highway Drains, Septic Tanks and Soakaways

Pipeline	**Normal Maintenance Responsibility**	
	All built before 1937	**All built after 1937**
Drain A to B	House 1	House 1
Septic tank B	House 1	House 1
Soakaways C & D	House 1	House 1
Drain E to F	House 2	House 2
Lateral Drain F to G	Sewerage Undertaker	House 2
Sewer G H I	Sewerage Undertaker	Houses 2 & 3
Septic Tank I	Sewerage Undertaker	Houses 2 & 3
Drain J to K	Houses 2 & 3	Houses 2 & 3
Soakaway K	Houses 2 & 3	Houses 2 & 3
Highway Drain L M N	Highway Authority	Highway Authority

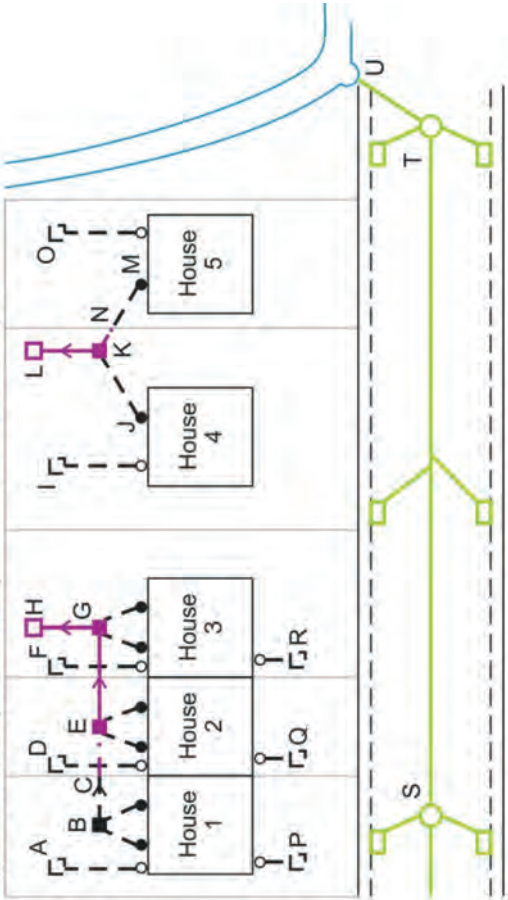

Figure 4 Highway Drains, Septic Tanks and Soakaways

Table 4 Highway Drains, Septic Tanks and Soakaways

Pipeline	**Normal Maintenance Responsibility**	
	All built before 1937	**All built after 1937**
Soakaways A & P, Drain B C	House 1	House 1
Lateral Drain C E	Sewerage Undertaker	House 1
Soakaways D & Q	House 2	House 2
Sewer E to G	Sewerage Undertaker	Houses 1 & 2
Soakaways F & R	House 3	House 3
Sewer G to H	Sewerage Undertaker	Houses 1, 2 & 3
Septic Tank H	Sewerage Undertaker	Houses 1, 2 & 3
Soakaway I	House 4	House 4
Drain J K	House 4	House 4
Drain M to N	House 5	House 5
Lateral Drain N to K	Sewerage Undertaker	House 5
Soakaway O	House 5	House 5
Sewer K to L	Sewerage Undertaker	Houses 4 & 5
Septic Tank L	Sewerage Undertaker	Houses 4 & 5
Highway Drain S T U	Highway Authority	Highway Authority

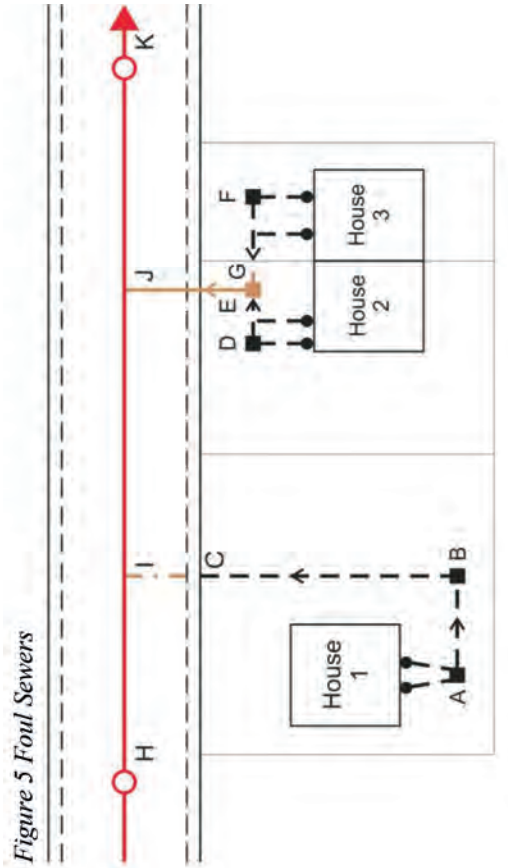

Figure 5 Foul Sewers

Table 5 Foul Sewers

Pipeline	**Normal Maintenance Responsibility**
Drain A B C	House 1
Lateral Drain C to I	Sewerage Undertaker
Drain D to E	House 2
Drain F to G	House 3
Lateral Drain G to E	Sewerage Undertaker
Sewer E to J	Sewerage Undertaker
Sewer H I J K	Sewerage Undertaker

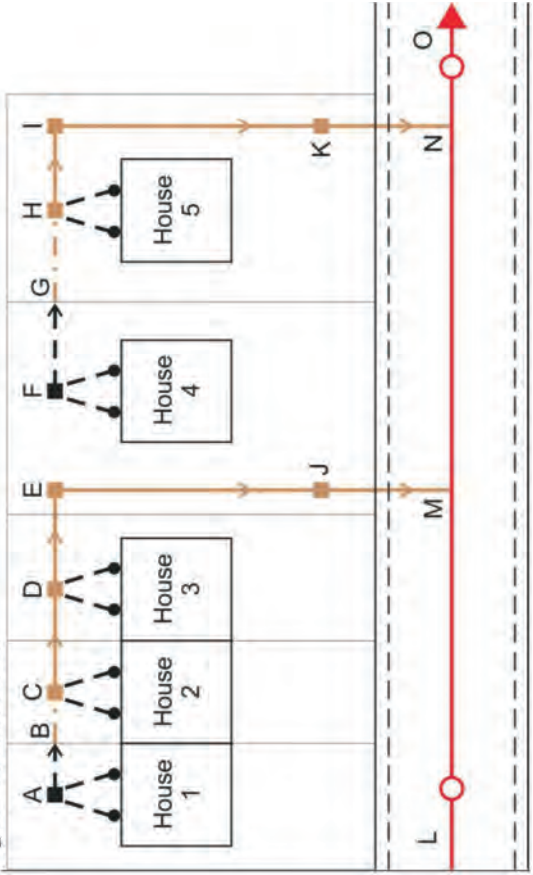

Figure 6 Foul Sewers

Table 6 Foul Sewers

Pipeline	**Normal Maintenance Responsibility**
Drain A to B	House 1
Lateral Drain B to C	Sewerage Undertaker
Sewer C D E J M	Sewerage Undertaker
Drain F to G	House 4
Lateral Drain G to H	Sewerage Undertaker
Sewer H I K N	Sewerage Undertaker
Sewer L M N O	Sewerage Undertaker

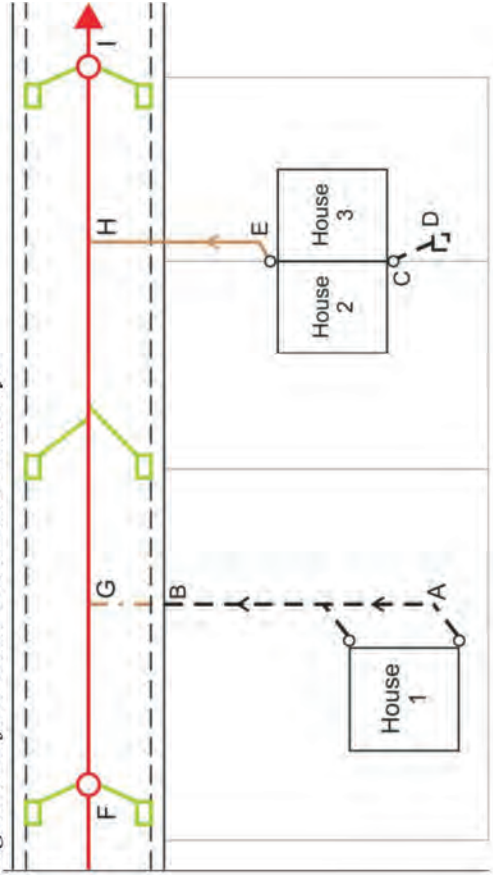

Figure 7 Surface Water Sewers and Soakaways

Table 7 Surface Water Sewers and Soakaways

Pipeline	**Normal Maintenance Responsibility**
Drain A to B	House 1
Lateral Drain B to G	Sewerage Undertaker
Drain C to D	Houses 2 & 3
Soakaway D	Houses 2 & 3
Sewer E to H	Sewerage Undertaker
Sewer F G H I	Sewerage Undertaker

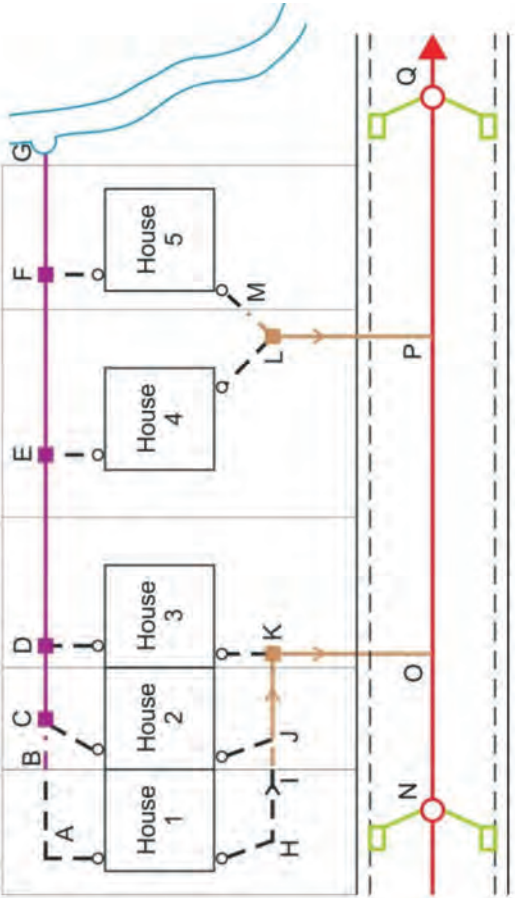

Figure 8 Surface Water Sewers

Table 8 Surface Water Sewers

Pipeline	**Normal Maintenance Responsibility**	
	All built before 1937	**All built after 1937**
Drain A to B	House 1	House 1
Lateral Drain B to C	Sewerage Undertaker	House 1
Sewer C to D	Sewerage Undertaker	Houses 1 & 2
Sewer D to E	Sewerage Undertaker	Houses 1, 2 & 3
Sewer E to F	Sewerage Undertaker	Houses 1, 2, 3 & 4
Sewer F to G	Sewerage Undertaker	Houses 1, 2, 3, 4 & 5
Drain H to I	House 1	House 1
Lateral Drain I to J	Sewerage Undertaker	Sewerage Undertaker
Sewer J K O	Sewerage Undertaker	Sewerage Undertaker
Lateral Drain M to L	Sewerage Undertaker	Sewerage Undertaker
Sewer L to P	Sewerage Undertaker	Sewerage Undertaker
Sewer N O P Q	Sewerage Undertaker	Sewerage Undertaker

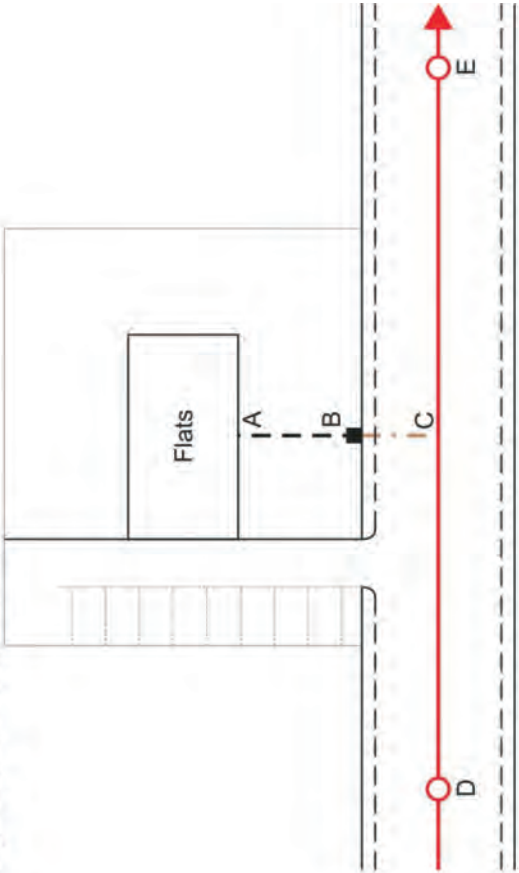

Figure 9 Flats – Foul Drainage

Table 9

Pipeline	**Normal Maintenance Responsibility**
Drain A to B	Owners of Flats
Lateral Drain B to C	Sewerage Undertaker
Sewer D C E	Sewerage Undertaker

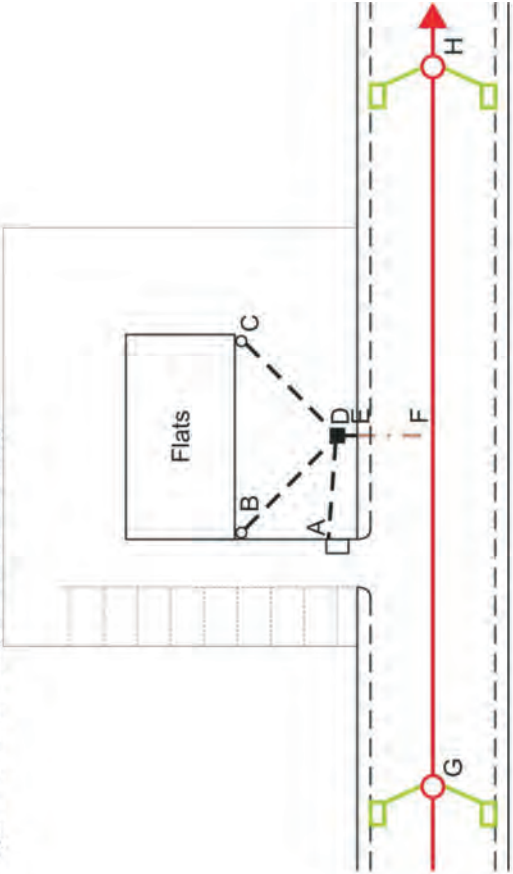

Figure 10 Flats – Surface Water Drainage

Table 10

Pipeline	**Normal Maintenance Responsibility**
Drain A to D	Owners of Flats
Drain B to D	Owners of Flats
Drain C to D	Owners of Flats
Drain D to E	Owners of Flats
Lateral Drain E to F	Sewerage Undertaker
Sewer G F H	Sewerage Undertaker

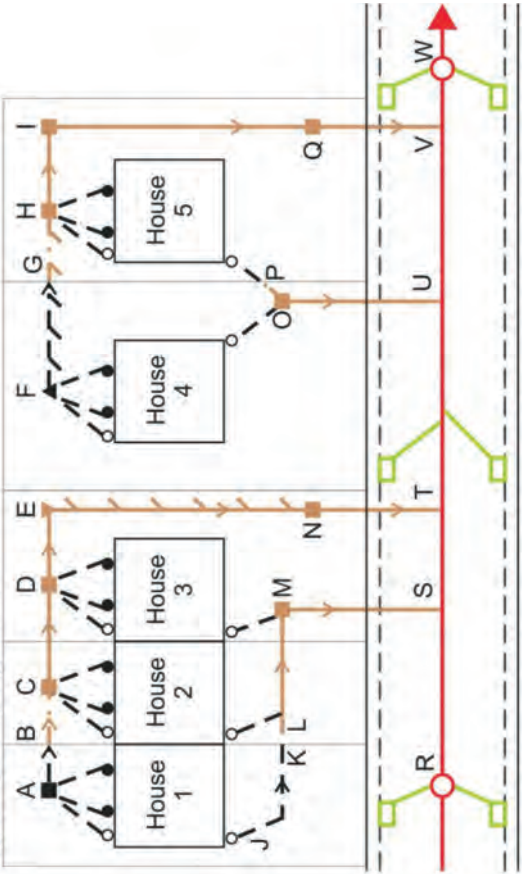

Figure 11 Pumping Stations

Table 11

Pipeline	**Normal Maintenance Responsibility**
Drains A to B and J to K	House 1
Lateral Drains B to C and K to L	Sewerage Undertaker
Sewer C D E	Sewerage Undertaker
Pumping Station E	Sewerage Undertaker (see Note 1)
Sewer (Rising Main) E to N	Sewerage Undertaker (see Note 2)
Sewer N to T	Sewerage Undertaker
Pumping station F	House 4
Drain (Rising Main) F to G	House 4
Lateral Drain (Rising Main) G to H	Sewerage Undertaker (see Note 2)
Lateral Drain P to O	Sewerage Undertaker
Sewer H I Q V and O U	Sewerage Undertaker
Sewers L M S and R S T U V W	Sewerage Undertaker

Note 1 The pumping station transfers on or before 1st October 2016

Note 2 The rising main transfers on or before 1st October 2016

NOTES

NOTES

NOTES

Foundation for Water Research
Allen House, The Listons
Liston Road, Marlow
Bucks. S17 1FD U.K.

Tel: (0) 1628 891589
Fax: (0) 1628 472711
E-mail: office@fwr.org.uk
Home Page: www.fwr.org

The Foundation for Water Research is a company limited by guarantee, registered in England No 525927 and a registered charity No 1086685